Guidelines for static analysis complexity level definition

Revisions:

2	06/10/2025	AMD Manager – F. Cademartori	QA/ EHSS – K. Gorrasi/ T. Morelli Stefani	R&D & Prod. Eng. Manager – M. Borghetti	Mod.552 reference included in paragraph 6 and 7.
1	18/12/2024	AMD F.Cademartori	Q/HSEM C.Delli Quadri/M Tremolada	R&D Manager M, Borghetti	Table 1 modified.
0	15/01/2024	AMD F.Cademartori	Q/HSEM C.Delli Quadri/M Tremolada	R&D Manager M, Borghetti	First issued
Rev.	*Date*	*Issued*	*Verified*	*Approved*	*Reason*

COPY COMPLIANT to the original document resident on the computer system at the time of printing

Index

1 Purpose 3

2 Abbreviations 3

3 Scope 3

4 Overview and relevance of static considerations 4

5 Analysis complexity levels 6

6 When the analysis is recommended 7

References 10

Annex 11

COPY COMPLIANT to the original document resident on the computer system at the time of printing

1. Purpose

This guideline describes and recommends the methods to appropriately evaluate pumping machinery construction attributes to determine the effect of static excitations on equipment life and reliability. It describes various levels of approximations that are commensurate with the degree of complexity of the analysis required to evaluate the equipment's design quality.

All manufactured goods are designed to comply with operational requirements, ensuring that no damage caused by operating conditions or external environmental factors compromises their proper functioning. Material selections, correct dimensioning, etc… are fundamental for an appropriate design.

This procedure applies to Nova Milanese and La Spezia plants.

2. Abbreviations

BB Between Bearings *(API610)*

FEA Finite Element Analysis

OH Overhung *(API610)*

SF Safety Factor

SM Safety Margin

RBE Rigid Body Element

3. Scope

This procedure covers all structural components (pump casing/cover, shaft, baseplate, etc…) that are part of a pumping system, as referenced in main international standards (e.g., API610, ANSI/HI, etc…), as shown in Annex 1. Where applicable, evaluations may include drive systems, ancillary equipment and the effect of local foundation and piping systems.

Evaluation scenarios include the following:

- New equipment prior to field installation.
- Existing equipment's condition assessment in the field.
- Existing equipment undergoing field modification.
- Existing equipment undergoing field rerate.

The capacity of each structural component to withstand the worst combinations of external forces is the subject of analysis according to the best practices, that are the result of experience gained

COPY COMPLIANT to the original document resident on the computer system at the time of printing

over the years. No dynamic amplification due to resonance conditions is considered in this procedure.

Typical excitation forces (e.g., internal/external pressure, nozzle loads, etc…) can be described in terms of the resulting amplitude and can be associated with either mechanical or hydraulic causes.

To provide useful and practical guidance across a broad range of types, sizes and application of pumping machinery, four levels of analysis, categorized by methodology, are discussed:

0. "Identical" pump[1], no calculations are required.
1. Simple calculation that may be performed using a hand calculator, calculation spreadsheet, etc…
2. Methods employing basic elastic or elasto-plastic modelling using commercially available software tools (e.g., FEA programs).
3. Advanced computational methods involving multiple specialty programs and complex methodologies.

4. Overview and relevance of static considerations

The purpose of this section is to provide information and guidance regarding the different types of pump's static issues, including analysis methods and their appropriate application.

The majority of rotordynamic pumps applications involve products where all necessary the engineering has been completed; operational experience exists for the pumps in essentially identical geometry configurations and similar applications. These products do not normally require further static analysis.

There also exist several pumps applications where an additional engineering effort by the manufacturer may be required prior to the use of the product. This engineering effort may be related to any of the following:

- Substantially new design.

[1] A pump is considered "identical" to another that has operated successfully in the field when:
- The materials adopted have identical physical properties and similar or better mechanical properties.
- The geometry does not present significant differences.
- The on-site arrangement is comparable in terms of interaction transmitted to and from the pump.
- The operating conditions (internal pressure, temperature, nozzle loads, hydraulics interactions, etc…) are identical or less onerous.

COPY COMPLIANT to the original document resident on the computer system at the time of printing

- Significant pump modification.
- Adaptation of a standard design to a non-typical application that involves a different physical arrangement, mounting, drive or operating condition (e.g., speed, rate of flow, percentage of BEP, etc…).

For these applications, the manufacturer has primary responsibility for the pump and the associated equipment's structural considerations. The manufacturer will perform any necessary analysis as part of design effort, within the context that the design is based on a typical application.

For some applications, the mechanical characteristics of the pumping equipment are significantly influenced by the installation, including piping systems, mounting or drive systems. In these cases, some type of analysis may be needed to assess the equipment as it will be installed. This analysis is best completed during the pump design phase since the structure, piping and drive system of the installation may influence the characteristics in a manner that leads to reliability problems once the pumps is installed.

COPY COMPLIANT to the original document resident on the computer system at the time of printing

5. Complexity levels of analysis

The summary of the recommended analyses, in accordance with the assumed complexity level, is presented and described in *Table 1*.

Table 1: Complexity level.

Analysis Complexity	Description	Expected Inaccuracies
Level 0	0. Pre-assessment, no analysis is required.	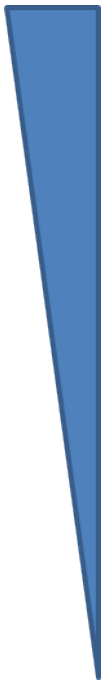
Level 1 Simple Calculations	1. Simple calculations using standard equations.	
Level 2 Intermediate Methods	2. Static analyses. 2.1. Shaft static stress and deflection – OH or BB pumps. 2.2. Shaft static stress and deflection – VS pumps. 2.3. Structural verification on separate components[2] – OH or BB pumps. 2.4. Baseplate structural verifications (e.g., lifting, nozzle load combination, API610 stiffness test acceptance, anchor bolts verification, etc...) – OH or BB pump. 2.5. Nozzle load FEA verification – VS pump. 2.6. Simplified hydrotest FEA verification[3] – OH, BB and VS pumps. 2.8. Simplified operating conditions FEA verification[2] – OH, BB and VS pumps.	
Level 3 Advanced Methods	3. Static analyses. 3.1. Hydrotest with contact and bolt verifications – OH, BB and VS pumps. 3.2. Hydrotest with gasketed connection – OH, BB and VS pumps. 3.3. Thermo-structural analysis (coupled or de-coupled).	

[2] It does not consider any contact modelling.
[3] The simplification level is related to the assumption of glued contact or equivalent connection (e.g., MPC constraints, etc…) between parts. The adoption of highly specialized tools in non-linear analyzes with contact is recommended when a detailed analysis of the connection behavior is required.

COPY COMPLIANT to the original document resident on the computer system at the time of printing

6. When the analysis is recommended

The purpose of performing any degree of static analysis is to provide an appropriate level of validation prior to the manufacturing or installation of the pump package into its intended operating environment. Validations may take several forms in this context (e.g., proven example, physical test on full size or scale models of equipment, analytical evaluations on pump, support systems, drive system, foundations, piping systems, etc…).

The appropriate level of evaluation increases with the accuracy requirements of results: a detailed analysis requires a more sophisticated approach, greater precision in boundary conditions definition, advanced calculation tools and/or methodologies, but it can allow the reduction of the SM to be adopted in the so called “robust design” practices.

It should be considered that both new and existing pump designs are often arranged in unique system configurations. These arrangements are supplied to suit specific site installation requirements. The level of uncertainty associated with these systems may be significant even when standard or proven pumps are used.

The flow chart in *Figure 1* must be used (**Mod.552**) to define the appropriate complexity level for the analysis; the main blocks in the picture are explained below:

- *Validation proven by experience or testing:* the mechanical system has been validated with mechanical tests or by the experience matured from an "identical" pump (i.e., same geometry, rotational speed, impeller outer diameters, materials, fluid characteristics, etc…).
- *Structural behavior describable “by formula”:* simplifications that can reduce the system complexity to analytical formulations from international standards, mechanical handbooks, etc… are assumed.
- *Gasket:* to guarantee the absence of leakage, a special component (plain gasket, spiral-would gasket, etc…) with high non-linear behavior is adopted.
- *Thermal effects:* thermal effects on mechanical/physical properties and expansions due to thermal fields[4] are included in the analysis.
- *Pure elastic material behavior:* the material behavior is assumed linear and perfectly elastic.
- *Small displacement theory:* the displacements of the material particles are assumed to be much smaller than any relevant dimension of the body so that its geometry and the constitutive

[4] Fields resulting from thermal analysis are described in a different procedure.

COPY COMPLIANT to the original document resident on the computer system at the time of printing

properties of the material at each point of space can be assumed to be unchanged by the deformation.

- *Isolated component:* the interactions between separate bodies are not subject of analysis.
- *Only glued contact or connectors:* interactions between bodies are simulated with bidirectional glued contact or by connectors (e.g, MPC[5], RBE2[6], RBE3[6], etc…).

[5] Multi Point Constraint is a special connector available in Nastran, Ansys, etc… useful to link nodes with general linear mathematical relations.
[6] Rigid Body Element is a special element available in Nastran, Ansys, etc… useful to connect nodes with linear mathematical relations.

COPY COMPLIANT to the original document resident on the computer system at the time of printing

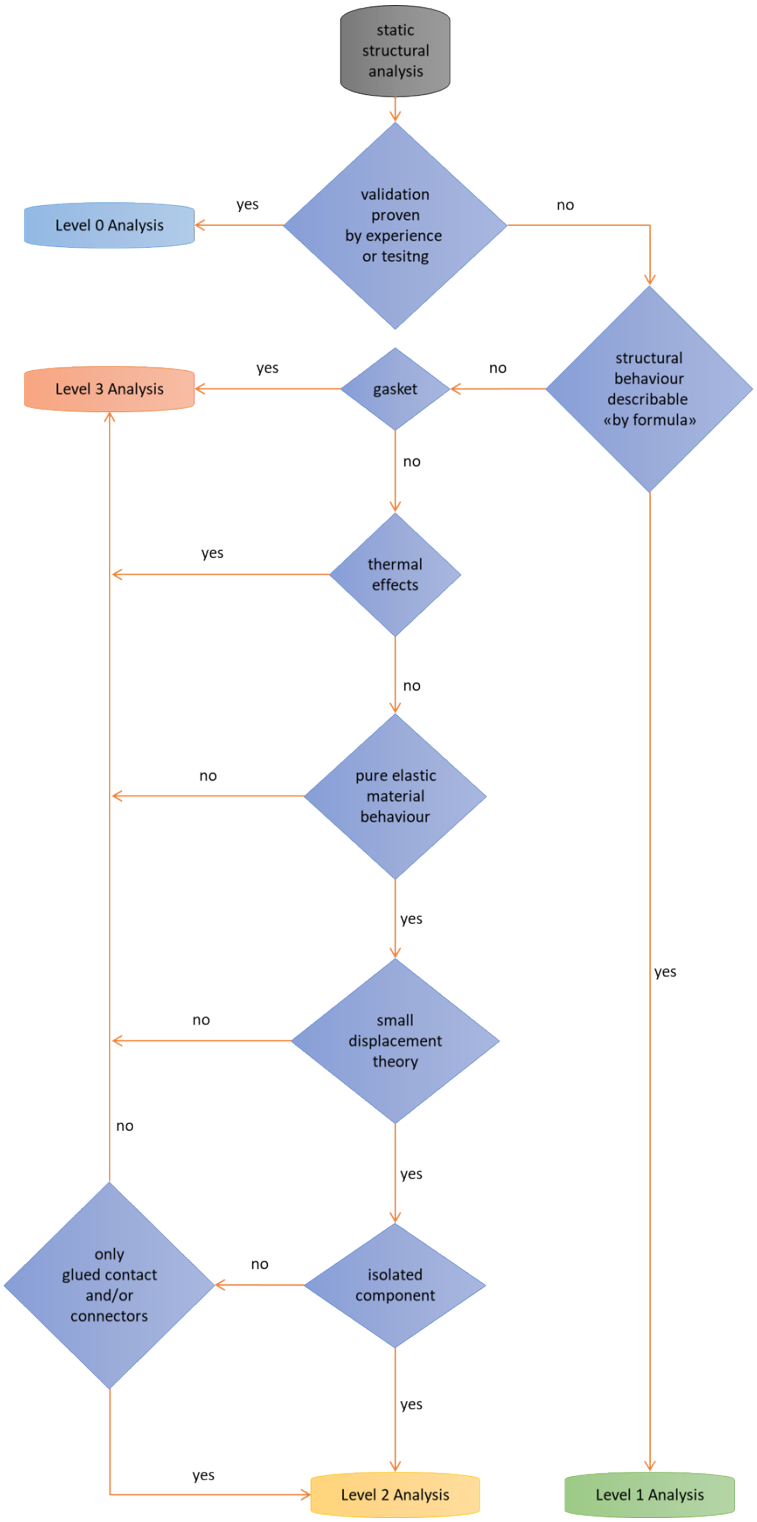

Figure 1: Complexity level flow diagram.

COPY COMPLIANT to the original document resident on the computer system at the time of printing

7. References

API STANDARD 610

Mod.552 - *Flow chart diagram for static analysis complexity level definition*

COPY COMPLIANT to the original document resident on the computer system at the time of printing

8. Annex – Rotordynamic pump types.

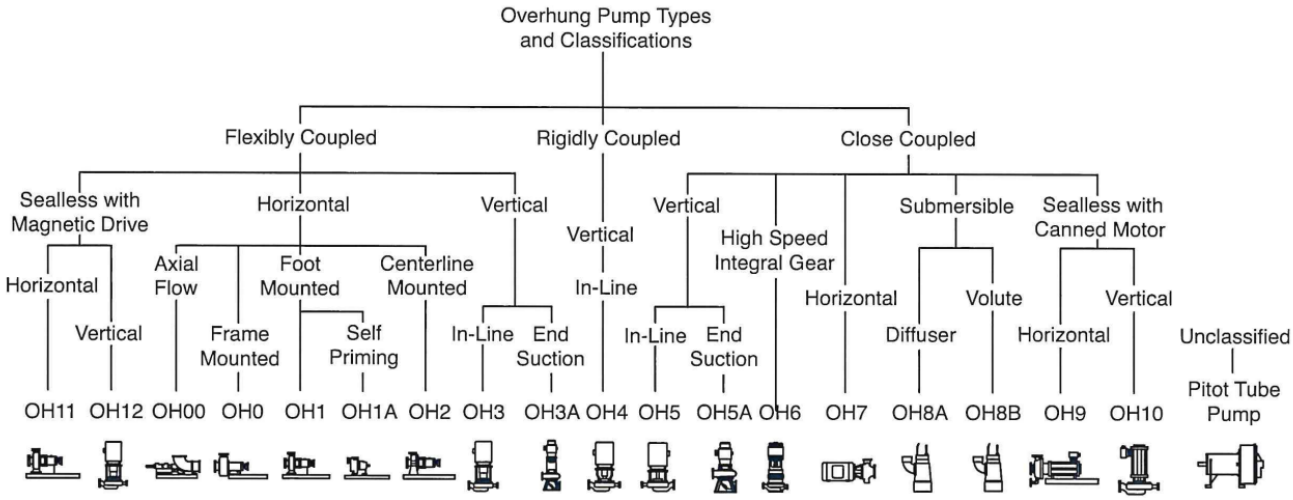

Figure 2: Overhung pump.

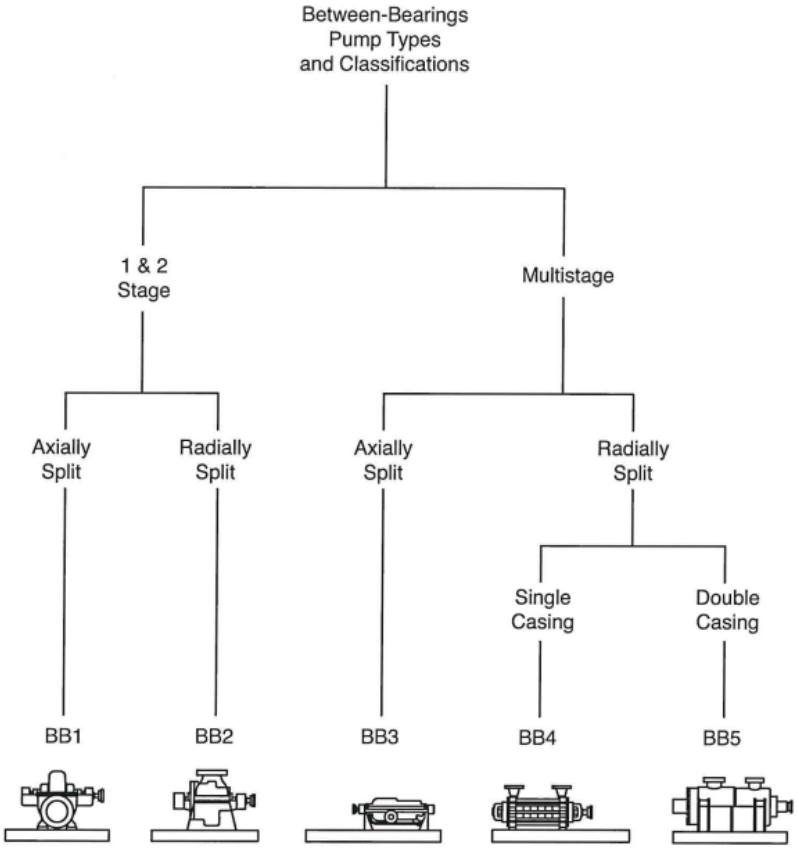

Figure 3: Between bearings pumps.

COPY COMPLIANT to the original document resident on the computer system at the time of printing

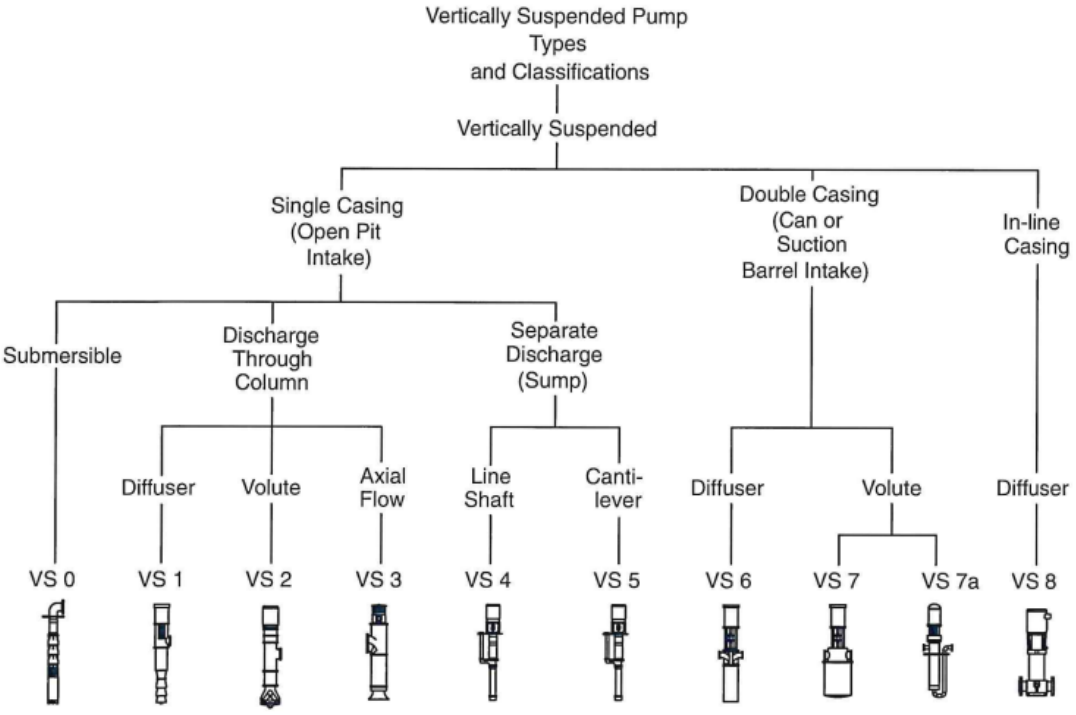

Figure 4: Vertically suspended pumps.

COPY COMPLIANT to the original document resident on the computer system at the time of printing